THIS COPY IS PROVIDED ON A RESTRICTED BASIS AND IS NOT TO BE USED IN ANY WAY DETRIMENTAL TO THE INTERESTS OF PANDUIT CORP.

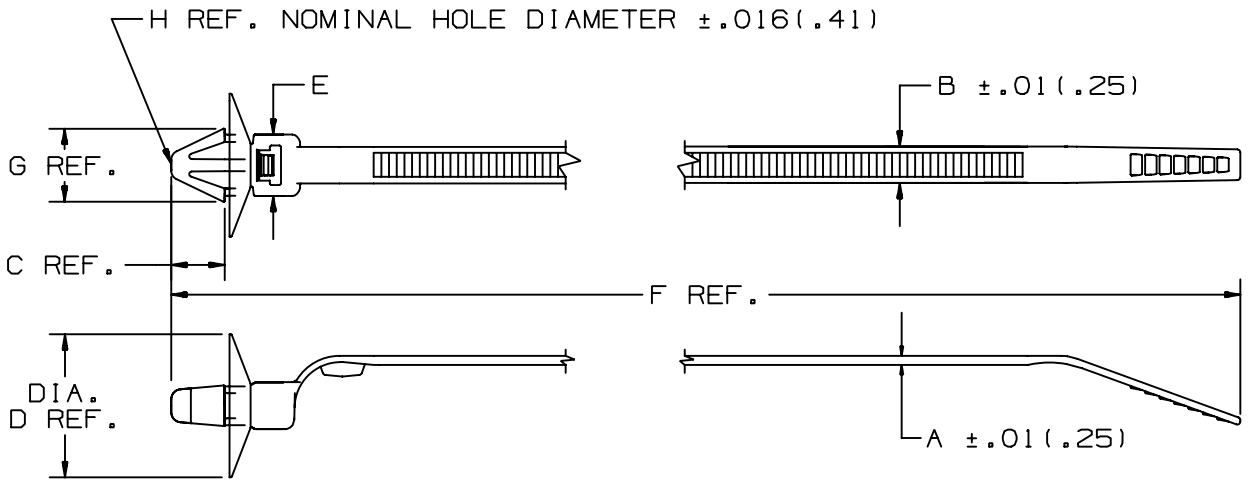


| PANDUIT PART NO. | BUNDLE DIA. MIN. in (mm) | BUNDLE DIA. MAX. in (mm) | A in (mm) | B in (mm) | C in (mm) | D in (mm) | E in (mm) | F in (mm) | G in (mm) | H in (mm) | MAX. PANEL THICKNESS in (mm) | MIN. LOOP TENSILE lbs (N) | CROSS-SECTION | WEIGHT 100 pcs lbs (g) |
|---|---|---|---|---|---|---|---|---|---|---|---|---|---|---|
| PLUP40SE | .06 (1.5) | 1.57 (40) | .047 (1.2) | .190 (4.8) | .295 (7.5) | .744 (18.9) | .320 (8.1) | 6.97 (177) | .378 (9.6) | .266 (6.8) | .050 (1.3) | 50 (222) | STANDARD | .31 (141) |

DIMENSIONS IN PARENTHESES ARE IN METRIC UNITS

PANDUIT CORP. TINLEY PARK, ILLINOIS

PLUP40SE
UMBRELLA WINGED PUSH MOUNT CABLE TIE

UNLESS OTHERWISE SPECIFIED, DIMENSIONAL TOLERANCES ARE:
(.X) ±.1(.25) (.XXX) ±.020(.51)
(.XX) ±.02(.5) ANGLES ± ---

UNLESS OTHERWISE SPECIFIED, ALL DIMENSIONS ARE GIVEN IN INCHES, THIRD ANGLE PROJECTION.

| REV | DATE | BY | CHK | DESCRIPTION | ECN - R | | CUST | SUP |
|---|---|---|---|---|---|---|---|---|
| 8 | 11/24/04 | ERW | | CHANGED MIN. LOOP TENSILE TO 50 (222). | 27067 | 8 | | |
| 7 | 11/1/04 | JABO | JVL | CHANGED FORMAT FOR CONSISTENCY SEE ECN FOR DETAILS | 27067 | 7 | JVL | |

DRAWN BY: BSH
DATE: 11/13/96
CHK'D: JML
MAT'L: NYLON 6.6
SCALE: NONE
DRAWING NO.: SS-27067
DWG SIZE: A